Hand-Held Helical Drive - Rental Unit

PRO-DIG L6K5 LIGHTWEIGHT DRIVE WITH HANDHELD BAIL

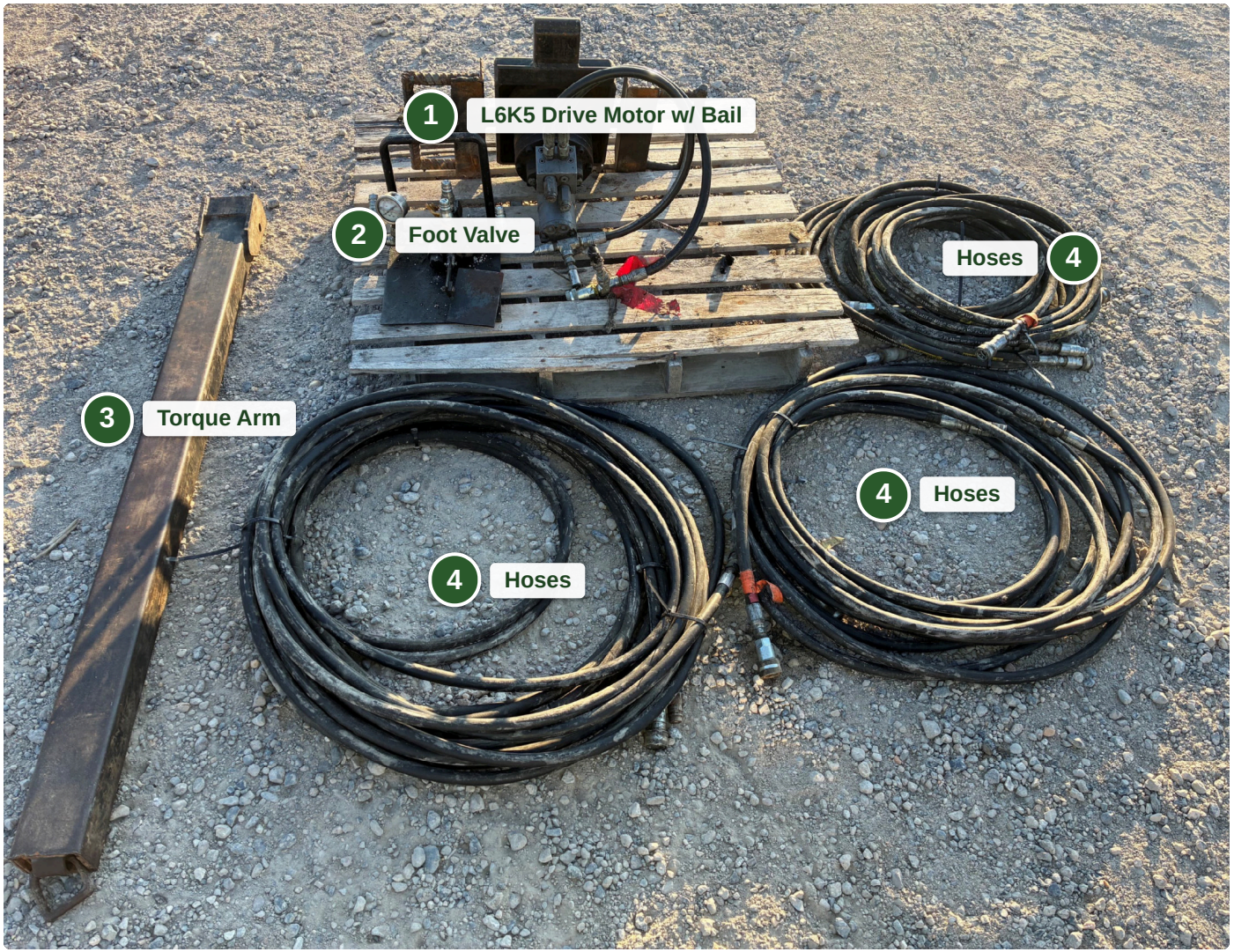

COMPONENT WEIGHTS

1	L6K5 Drive Motor with Handheld Bail	**144 lb**
2	Foot Valve	**25 lb**
3	Torque Arm	**60 lb**
4	Hoses	**50 lb**
	Total Operating Weight	**279 lb**

Power pack not included. Bare L6K5 motor without the handheld bail is 92 lb - see Pro-Dig spec sheet on the following page.

HOSE SET

Power Pack → Foot Valve IN / OUT, male / female	**2 × 20 ft**
Foot Valve → Drive Head A / B	**2 × 50 ft**
Spare Extension A / B	**2 × 25 ft**

DRIVE SPECS - PRO-DIG L6K5

Hydraulic Flow	**5 - 16 GPM**
Max Continuous Pressure	**2,500 PSI**
Output Torque @ 2,500 PSI	**6,335 ft-lb**
Output Shaft	**2" Hex**
Output Speed	**6.3 - 13.8 RPM**

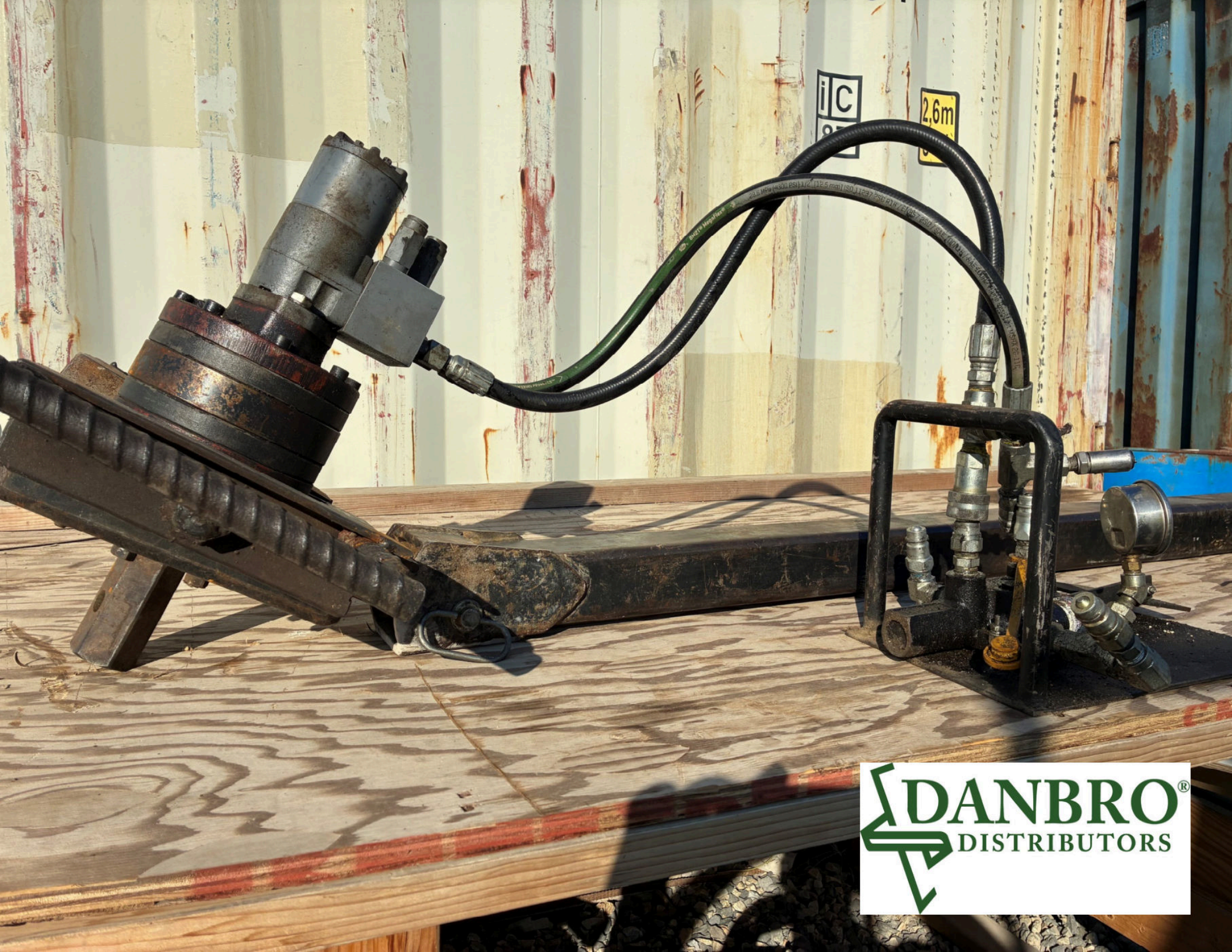

DANBRO®
DISTRIBUTORS

PRO-DIG
Reliability Under Pressure
785.856.2661
www.pro-dig-usa.com

L6K5 No Bail Lightweight Drive

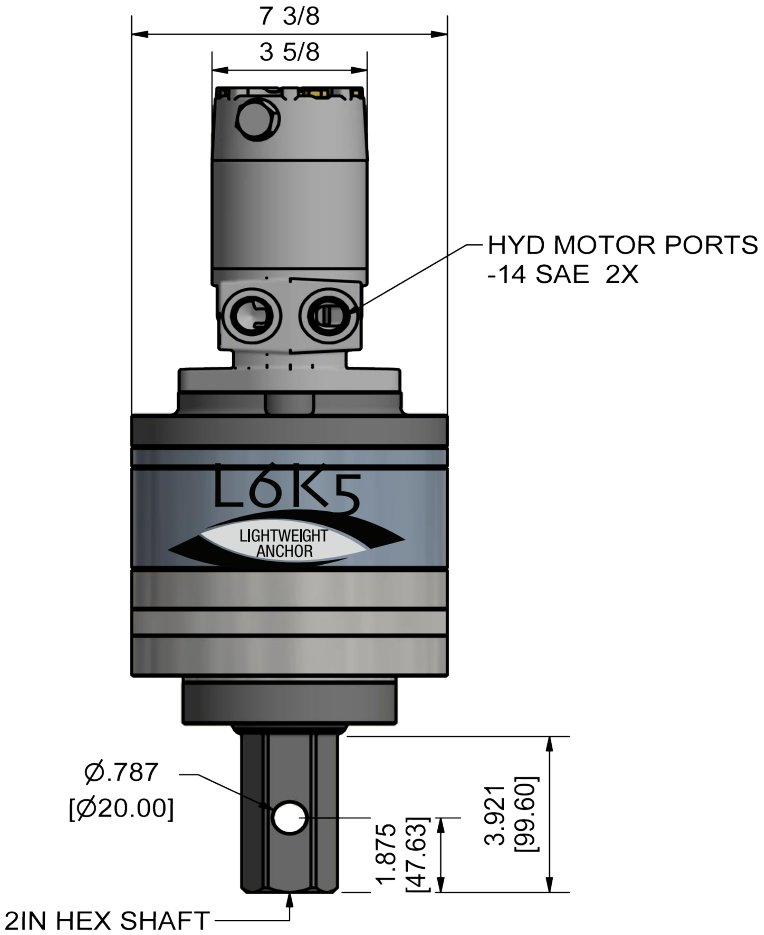

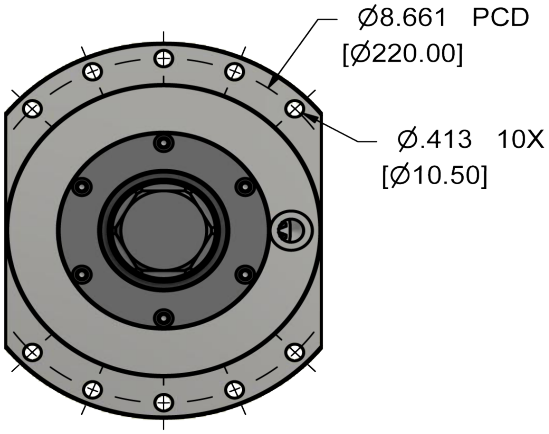

L6K5	
Motor Mount	SAE "A" 2 Bolt
Motor	198cc Bidirectional Speed
Min. Hydraulic Flow	5 GPM
Max. Hydraulic Flow	16 GPM
Max. Continuous Pressure	2500 PSI
Output Shaft	2" Hex

OUTPUT SPEED

FLOW GPM (LPM)	SPEED RPM
5	6.3
10	8.1
12	9.9
16	13.8

OUTPUT TORQUE (HIGH TORQUE)

PRESSURE PSI	TORQUE FT/LBS (Nm)
900	2281
1200	3041
1800	4561
2500	6335

Bare Motor Weight = 92 lb
w/ Handheld Bail (as rented) = 144 lb

DANBRO® DISTRIBUTORS

DIRECT DRIVE POWERED BY BLACK BRUIN
MMS
intelli-Tork Cloud Based Torque Monitor
EZ PILE
DT